GREGORY®
TECHNOLOGY GMBH

flowtronic Sensor Series S8005

Product Information

© GREGORY Technology GmbH

Introduction

The *flowtronic* sensors are developed for fuel consumption measurement of internal combustion engines. Today's *flowtronic* devices suit many kinds of consumption measurement with gasoline, diesel, alcohol based and bio fuels due to easy handling, robust and durable construction and also due to unique quality. The new product generation *flowtronic* S8005 introduces a technically updated sensor in combination with a heat exchange unit and new developed signal electronics.

For more than 30 years *flowtronic* fuel consumption test equipment is worldwide known primarily as Swiss precision. GREGORY Technology in Germany has taken over the complete product line for several years and is doing continuous development as well as production and service.

The new system is suitable for gasoline, diesel and now also for alcohol based and bio fuels.

flowtronic systems are used for fuel consumption measurement with engines of passenger cars, trucks, heavy duty and specialized vehicles, motorbicycles and ships. The devices can be used mobile in vehicles as also stationary at the test bench. The *flowtronic* systems fit many fuel supply systems.

The optional heat exchange unit HE8005 provides fuel temperature conditioning to avoid gas bubbles within the engine-related fuel circuit. An optional pressure regulator is used for pressure conditioning within the fuel supply to the engine.

The *flowtronic* sensor S8005C requires one out of the two external signal electronics SCU8005D or S8005AD-2 for operation.

Features

The following features are provided by the sensor S8005C with heat exchanger unit HE8005 in combination with the signal electronic and accessories:

- further development of the proven and worldwide introduced *flowtronic* sensor with improved resolution and accuracy
- modular system with robust design, compact size and few maintenance requirement
- measuring range 0.1 up to 250l/h
- fuel circulation rate of the internal fuel pump up to 170l/h
- conditioning of the fuel supply pressure
- suitable for gasoline, diesel, alcohol based and bio fuel
- external signal electronic with easy operation via touch screen display, analogue and digital signal outputs, USB interface for external PC and printer, signal input for distance sensor or GPS based system for distance related fuel consumption measurement, software for data transmission and storage on external PC

- sensors for fuel temperature and fuel pressure (option)
- quick-lock couplings (on both sides self closing), spill-free couplings upon request
- power supply 10…15V DC from vehicle battery
- robust carrying case with fuel resistant special foam inserts for transport and storage

Sensor S8005C

The compact model S8005C is the universal flow sensor to be used for many engines with maximum fuel consumption in a range from 0.1 up to 250l/h.

It is suitable for gasoline, Diesel, alcohol based and bio fuel and can be used mobile in vehicles as also stationary at the test bench.

The simple and quick installation can be executed for example within the engine compartment. Quick-lock couplings (on both sides self closing) support the fast installation and handling.

Spill-free quick-lock couplings for clean operation are available upon request.

Signal Electronics for the Sensor S8005C

For system operation one out of the two available signal electronics SCU8005D or S8005AD-2 is generally required.

Signal Electronic S8005AD-2

The signal electronic with basic functionality.

Technical features:

- signal input for S8005C sensor
- one each analogue signal (flow rate) and TTL signal (fuel volume), the scaling of the outputs covers the respective maximum measuring ranges, both signal outputs are provided on BNC connectors
- display of system status via LEDs
- power supply with 12V DC (vehicle power)

System Architecture of Sensor S8005C with Signal Electronic S8005AD-2

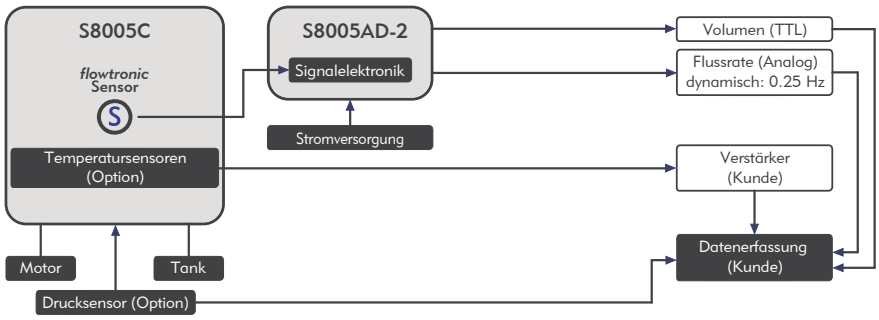

Signal Electronic SCU8005D

The powerful signal electronic with LC display for operation and data display and with internal software.

Technical features: (partly options)

- signal input for S8005C sensor
- signal input for external distance sensor for distance-based fuel consumption measurement
- one each signal output for fuel volume (TTL) and flow rate (analogue)
- trigger input with start/stop function for manual remote control, light barrier or other switches, also to be used for external speed/distance sensor calibration
- USB interface for connection to a notebook/PC in combination with software flowProArchive or for external *flowtronic* printer
- integrated software with test procedures for:
  - "Flow Display" for flow rate, total flow and average values
  - "Elapsed Time" for time, flow rate, time based total flow and average values
  - "Distance" for flow rate, distance, speed and average values
- The software also includes a calibration procedure for the external distance sensor.
- display of system status via LEDs
- robust suction holder for mounting to the front screen
- power supply with 12V DC (vehicle power)

System Architecture of Sensor S8005C with Signal Electronic SCU8005D

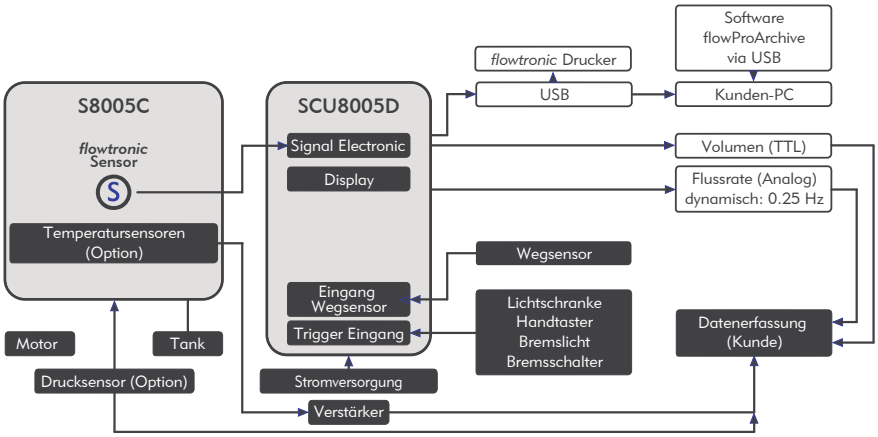

Fuel Temperature Measurement (Option)

For advanced fuel consumption measurement the *flowtronic* sensor S8005C can be supplied with two optional thermocouples (K-type or PT-100) mounted into the fuel in- and outlet of the flow sensing element.

An amplifier for the thermocouple or PT100 signal is required separately (not included in delivery).

Fuel Pressure Measurement (Option)

Fuel pressure measurement is available as a further option. The pressure sensor module mounted into the fuel supply between sensor and engine generates an analogue output of 0…5V for a pressure range of 0…6bar.

Please consider the operational system pressure of max. 5 bar.

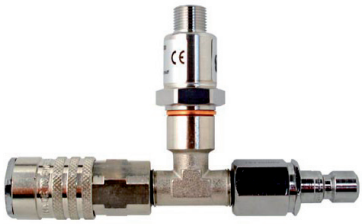

Distance and Speed Sensor

The signal electronic SCU8005D includes a TTL input for distance and speed related fuel consumption measurement (l/100km, km/l).

This connects for example the wheel pulse encoder *flowtronic* 208, a non-contact (Correvit®) or a GPS-based distance sensor.

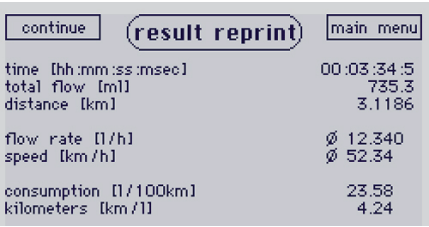

Heat Exchange Unit HE8005

Extending the sensor with the optional heat exchange unit *flowtronic* HE8005 enables the system to operate also with engines which have a fuel supply system with fuel return back to the tank. In addition the heat exchange unit avoids gas bubbles within the engine related fuel circuit in case of high ambient temperatures. An extra pressure regulator provides manual pressure adjustment within the fuel supply to engine. The fuel return pressure cannot be adjusted.

- quick-lock couplings (on both sides self closing)
- robust design with aluminum housing
- power supply with 12V DC (vehicle power), integrated automatic circuit breaker
- fuel circulation rate max. 170 l/h

Software flowProArchive

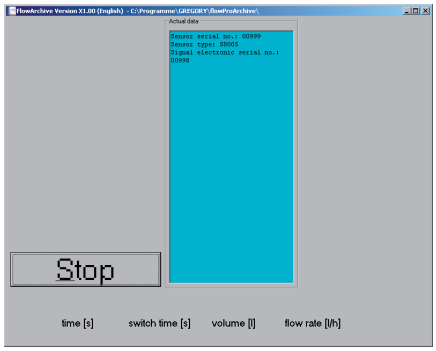

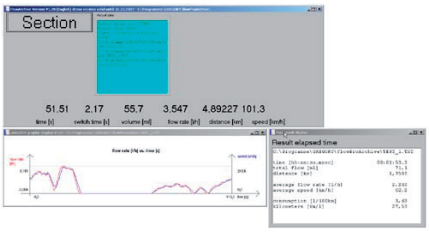

The software "flowProArchive" is a 32-bit program running under MS-Windows 98SE ... 7. It is designed for data transfer between the signal electronic SCU8005D to a notebook/PC via USB connection.

The system parameters of the signal electronic SCU8005D can be set by this software.

Furthermore the software reads the information from the signal processing units and creates test data files. These files can be imported to spread sheet software for further evaluation and presentation.

The software "flowProArchive" provides additional functionality like off-line on-screen test data presentation in table or graphic format.
The much more advanced software "flowDataProArchive" is designed for special applications with many test data files (for example like fleet testing) and offers much more functionality especially for test data handling and test data evaluation. This software version will be designed according to the customer's requirements.

External *flowtronic* Printer

External printer for connection to the serial interface of the signal electronic SCU8005D.

The software prints the calculated and formatted test data after each test. Upon request, the same test data can be printed several times.
The manufacturer specifies a long storage time for the original thermal printer paper. Please refer to the manual for further details.

Rechargeable batteries for power supply are included to this printer (a battery charger is also included).

Alternatively the unit can be operated by 12V DC (vehicle power).

Distributor Box 12V DC

Distributor boxes are available for safe connection to 12V DC (vehicle power) and operation of all system components.

They are available in different versions.

- robust design in aluminum die-cast housing
- 12V outputs fitting to 12V BOSCH connectors or 4mm plugs
- connection to the vehicle power supply with 12V BOSCH connectors or battery clamps (please consider max. power consumption of the complete system for best selection of the type of connection!)
- power supply via 12V DC (vehicle power)

Carrying Case

- for S8005C, SCU8005D and accessories or
- for S8005C with HE8005, SCU8005D, accessories (with integrated trolley for easy handling)
- material: robust fuel resistant plastic, aluminum profiles with plastic edge protection
- water-jet cut foam inserts made of fuel resistant, high-quality closed porous material
- temperature resistance -40...+80°C
- complete with two retractable handles and an ordinary lock
- additional inner aluminium case for signal electronic, cables and electric accessories for increased protection against soiling by small remains of fuel
- to be used for storage and transport (for shipping only when packed into an additional cardboard box according to GREGORY Technology shipping instructions)

Technical Data Sensor S8005C and Heat Exchanger HE8005		
Permitted fuel types		gasoline, diesel, alcohol based and bio fuel
Measurement parameters		fuel volume, fuel temperature (option), fuel pressure (option)
Quick-lock connectors	Range: 100l/h Range: 150l/h Range: 250l/h	NW 5.8 NW 5.8, NW 9.5 or special spill-free version upon request NW 5.8, NW 9.5 or special spill-free version upon request
Flow rate	Measuring range	0,1…250 l/h
Volume	Measuring accuracy Measuring resolution	± 0.5% of value (at a flow rate within 1...50l/h) 0.004ml
Fuel temperature	Measuring range Measuring accuracy Measuring resolution	-20...+75°C K type DIN IEC 584, class 1 depending on external data acquisition
Fuel pressure	Measuring range Measuring accuracy Measuring resolution	0...6bar (max. consider maximum operational system pressure of 5bar! 10bar option available.) ± 0.25% of full scale depending on external data acquisition
Inner diameter (mm) of engine fuel tube		≤ 12
Quick lock couplings		self closing
Operational pressure		5bar, optional 10bar
Operational temperatue		-20…+70°C
Drop of pressure (without filter)		30kPa at 50l/h, 80kPa at 120l/h
Fuel filter		2 located in each fuel tube
Operating directions		any
Dimensions (WxHxD)	**Sensor S8005C**	approx. 120x105x85mm
	Heat exchanger HE8005	approx. 250x195x85mm (without connectors)
Weight	**Sensor S8005C**	approx. 2.6kg
	Heat exchanger HE8005	approx. 5.6kg
Temperature sensor (option)		For advanced fuel consumption measurement the *flowtronic* sensor S8005C can be supplied with two optional thermocouples (K-type or PT-100) mounted into the fuel in- and outlet of the flow sensing element. An amplifier for the thermocouple or PT100 signal is required separately (not included in delivery).
Power supply		12V DC
Power consumption		nominal 8A

Technical Data Signal Electronics S8005AD-2 und SCU8005D			
		S8005AD-2	SCU8005D
To be used with		Sensor S8005C and FCS System	
Analogue output	Unit Scaling (Factory default settings) output Voltage Range Connector Dynamic	l/h 100mV/(l/h) for the measuring range 0...100l/h 65mV/(l/h) for the measuring range 0...150l/h 40mV(l/h) for the measuring range 0...250l/h 0...10V DC BNC 0.25 Hz	
Digital output	Unit max. Frequency Scaling (Factory default settings) Level Duty cycle Connector	P/ccm 30kHz 800P/ccm for the measuring range 0...100l/h 480 P/ccm for the measuring range 0...150l/h 288 P/ccm for the measuring range 0...250l/h 5V, max. 15mA 50% / 1:1 BNC	
Sample / Transfer rate		-	3 Hz
Power supply		nominal 12V DC (9 ... 36V DC)	
Power consumption		0.5A at 12V DC, max. 6W	0.5A at 12V DC, max. 30W
Power supply cable (Factory default settings)		2m, with BOSCH vehicle plug or 4mm Banana plugs	
Ambient temperature range (operation)		-20…+70°C	
Weight		approx. 500g	approx. 720g
Dimension (WxHxD)		ca. 110x45x165mm	ca. 135x95x105mm
Signal cable to sensor		3m (standard) or 15m (option), 15pin HDSub socket/ 8pin CANON MIL socket	
Interface		not available	USB interface
Options for SCU8005D only	Input for : Light Barrier, Brake Switch, Hand Push Button Brake Light Input Distance Sensor Input	not available not available not available	potential free switch contact, 9 pin DSub plug OR combination, switch function triggers the Start/Stop function of the display 0...24V DC, switch level at 2.5V, 9 pin DSub plug for example *flowtronic* 208, CORRSYS-Datron, vBox etc.

		SCU8005D
Display	Type Size Character Height	monochrome LC display 240x128 pixel, 4.2 inch depending on software function
Refresh-rate		3 times / s
Resolution of display	volume flow rate distance speed time	7 digits, 000000.0, leading sign (only positive), unit „Millilitre“ 6 digits, 000.000, leading sign, unit „Litre per hour“ 7 digits, 000.0000, without leading sign, unit „Kilometre“ 4 digits, 000.0, without leading sign, unit „Kilometre per hour“ 7 digits, 00:00:00.0, without leading sign, unit „hh:mm:ss:msec“ Units are abbreviated, e.g.: „l“ for „Litre“, „km“ for „Kilometre“
Display illumination and contrast		automatic
Ambient temperature range (operation)		-20…+70°C
Function keys		software based, programmed touch screen buttons, depending on provided software, for example manual start / stop, “Start“ resets the total consumption value to zero and starts the measurement. “Stop“ ends the measurement and freezes the displayed values

Warning:

To ensure correct use please read all technical documentation before setting the system into operation. This helps to avoid inaccurate operation. Working according to the operation manual is required for a safe and technically intended use of the S8005 system.

In case of questions please do not hesitate to contact GREGORY Technology GmbH for further assistance.

Please visit us for our complete service range at www.flowtronic.de and at www.GREGORY.de .

Please feel free to aks for individual special solutions.

GREGORY® TECHNOLOGY GMBH

Mombacher Str. 56
D-55122 Mainz
Phone: +49 (0) 6131-60 30 9-0
Fax: +49 (0) 6131-60 30 9-99
www.flowtronic.de, www.GREGORY.de
email: info@GREGORY.de

All trademarks are property of the respective producers.

All illustrations, descriptions or technical data are without guarantee and are based upon the information of the producer; errors excepted and technical improvements are subject to change without prior notice.